Truely balanced phantom powered line driver for electret microphone capsule

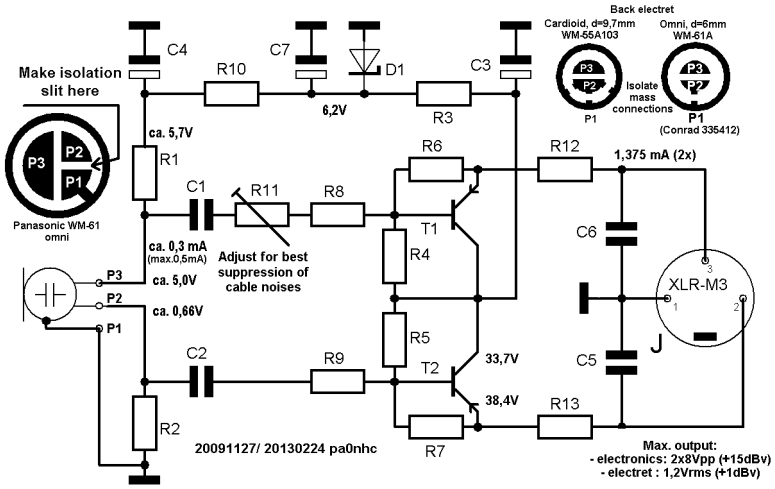

R1,2 = 2k2
R3 = 10k
R4,5 = 150k
R6,7 = 33k
R8 = 4k7
R9 = 10k
R10 = 1k8

R11 = 5k Cermet
(Output impedance balance adjustment)

R12,13 = 150

C1,2 = **330n**
PAIRED film capacitors

C3 = 10u 65V electrolytic
C4,7 = 10u 10V electyrolitic

C5,6 = 4n7
PAIRED film capacitors

T1,2 = 2N5401
D1 = 6,2V