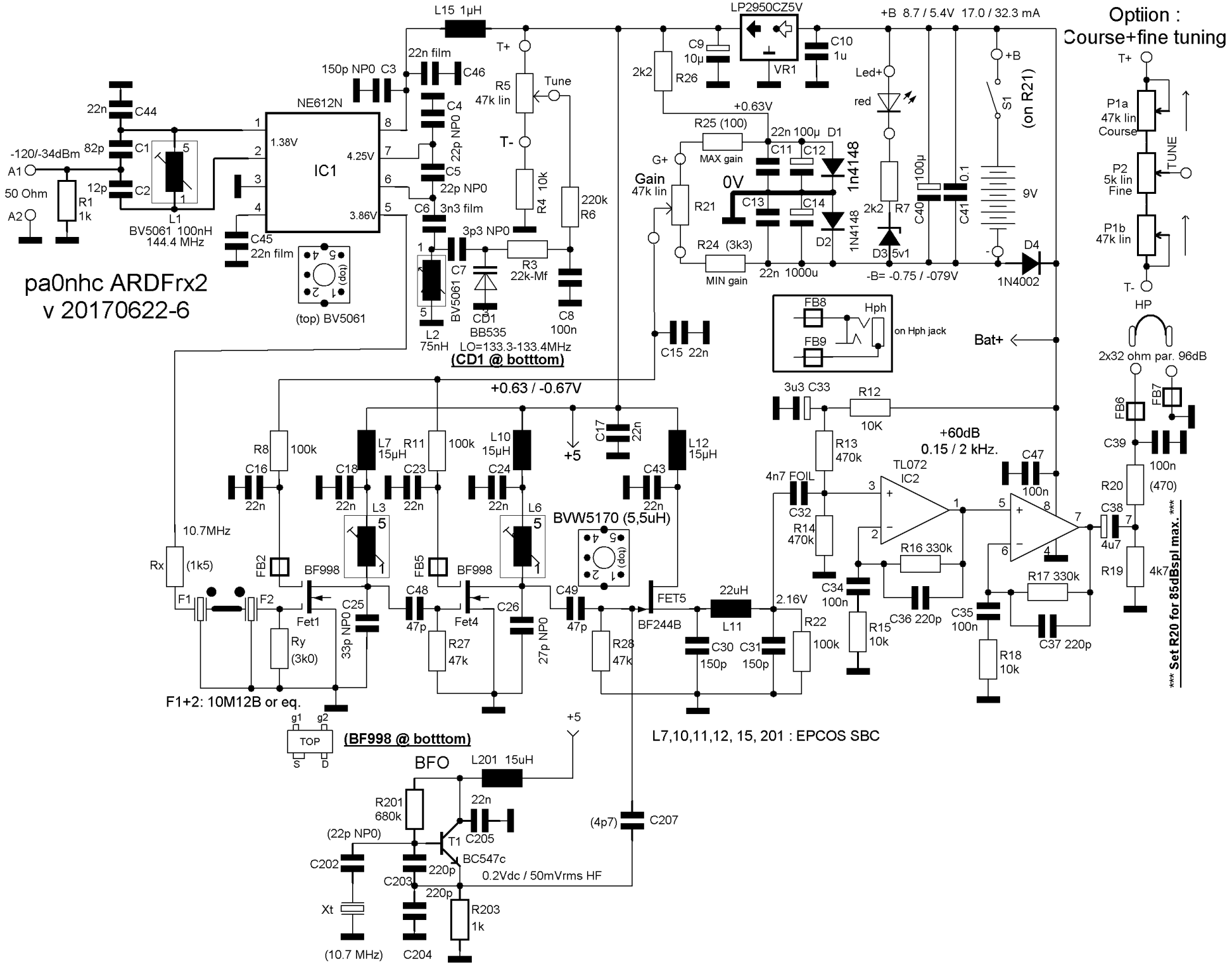
pa0nhc ARDFrx2
v 20170622-6
Optiion :
Course+fine tuning
NE612N
IC1
1.38V
4.25V
3.86V
L15 1µH
LP2950CZ5V
VR1
+B 8.7 / 5.4V 17.0 / 32.3 mA
-120/-34dBm
A1
A2
50 Ohm
R1 1k
L1
BV5061 100nH
144.4 MHz
(top) BV5061
L2 75nH
CD1 BB535
LO=133.3-133.4MHz
(CD1 @ botttom)
Tune
R5 47k lin
R4 10k
R6 220k
R3 22k-Mf
C8 100n
Gain 47k lin
R21
R25 (100)
MAX gain
R24 (3k3)
MIN gain
+0.63V
0V
1n4148
1N4148
D1
D2
D3 5v1
D4
1N4002
Led+
red
R7 2k2
S1
(on R21)
9V
-B= -0.75 / -079V
FB8
FB9
Hph
on Hph jack
Bat+
P1a 47k lin Course
P2 5k lin Fine
P1b 47k lin
TUNE
HP
2x32 ohm par. 96dB
FB6
FB7
C39 100n
R20 (470)
R19 4k7
C38 4u7
*** Set R20 for 85dBspl max. ***
+0.63 / -0.67V
+5
10.7MHz
Rx (1k5)
F1
F2
Ry (3k0)
BF998
Fet1
Fet4
BVW5170 (5,5uH)
L3
L6
FET5
BF244B
22uH
L11
TL072
IC2
+60dB
0.15 / 2 kHz.
R12 10K
R13 470k
R14 470k
R15 10k
R16 330k
R17 330k
R18 10k
R22 100k
R27 47k
R28 47k
F1+2: 10M12B or eq.
(BF998 @ botttom)
L7,10,11,12, 15, 201 : EPCOS SBC
BFO
L201 15uH
R201 680k
T1 BC547c
C205
C207
C202
C203
C204
Xt
(10.7 MHz)
R203 1k
0.2Vdc / 50mVrms HF