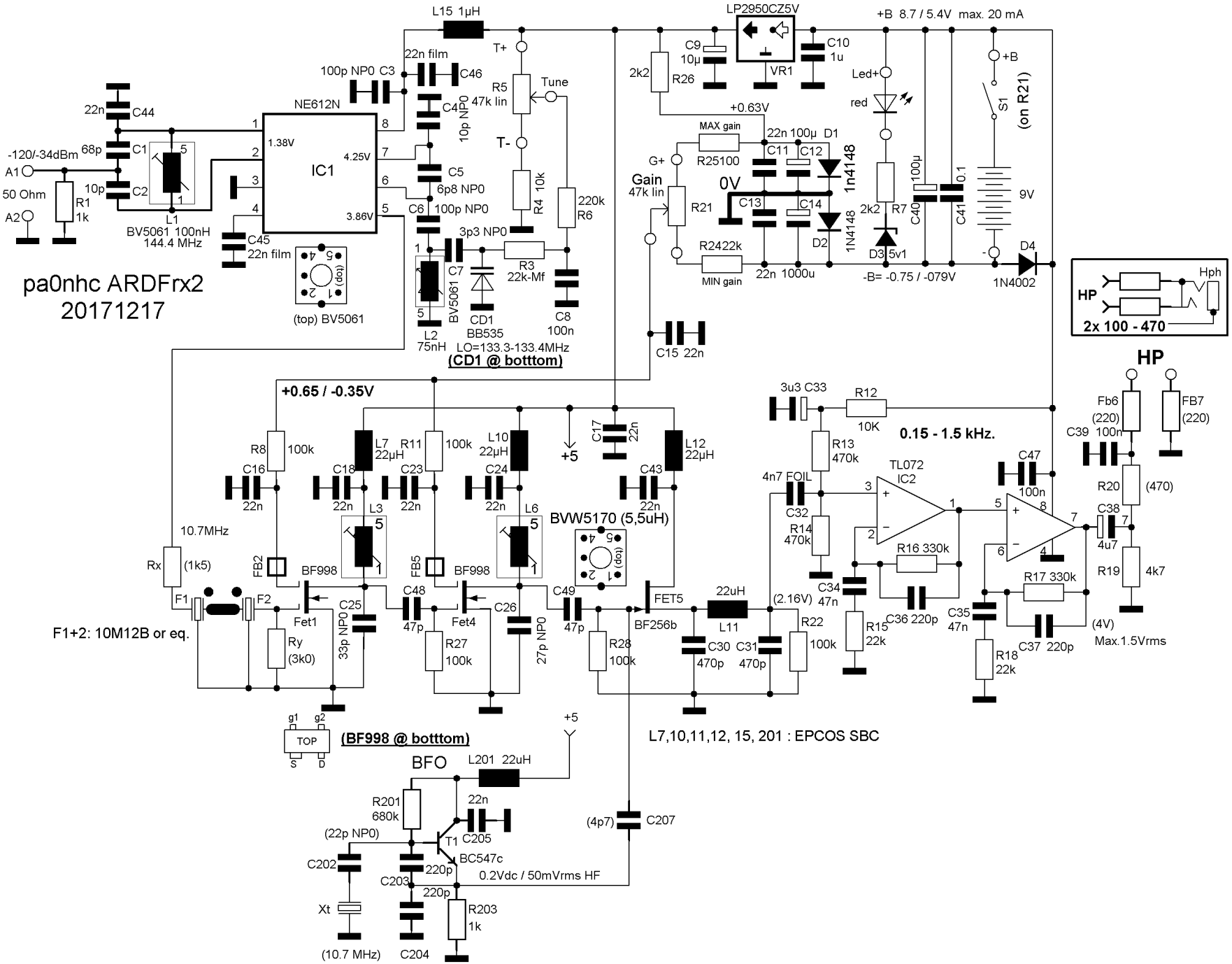
pa0nhc ARDFrx2
20171217
NE612N
IC1
1.38V
4.25V
3.86V
L15 1µH
LP2950CZ5V
VR1
+B 8.7 / 5.4V max. 20 mA
C9 10µ
C10 1u
2k2 R26
+0.63V
MAX gain
R25100
22n 100µ D1
C11 C12
1n4148
G+
Gain 47k lin
R21
0V
C13 C14
D2
1N4148
R2422k
MIN gain
22n 1000u
-B= -0.75 / -079V
D3 5v1
R7 2k2
C40 100µ
C41 0.1
9V
D4
1N4002
Led+
red
+B
S1
(on R21)
T+
T-
R5 47k lin
Tune
R4 10k
220k R6
100p NP0 C3
22n film C46
C4 10p NP0
C5 6p8 NP0
C6 100p NP0
3p3 NP0
R3 22k-Mf
C7
BV5061
CD1 BB535
C8 100n
L2 75nH
LO=133.3-133.4MHz
(CD1 @ botttom)
C15 22n
-120/-34dBm
A1
50 Ohm
A2
R1 1k
22n C44
68p C1
10p C2
L1 BV5061 100nH
144.4 MHz
C45 22n film
(top) BV5061
HP
Hph
2x 100 - 470
+0.65 / -0.35V
R8 100k
C16 22n
L7 22µH
C18 22n
R11 100k
C23 22n
L10 22µH
C24 22n
+5
C17 22n
L12 22µH
C43 22n
L3
L6
BVW5170 (5,5uH)
10.7MHz
Rx (1k5)
FB2
FB5
BF998
F1
F2
Fet1
Fet4
Ry (3k0)
C25 33p NP0
C48 47p
R27 100k
C26 27p NP0
C49 47p
R28 100k
FET5
BF256b
22uH
L11
C30 470p
C31 470p
(2.16V)
R22 100k
F1+2: 10M12B or eq.
g1 g2
TOP
S D
(BF998 @ botttom)
3u3 C33
R12 10K
0.15 - 1.5 kHz.
R13 470k
4n7 FOIL
C32
R14 470k
TL072
IC2
C34 47n
R15 22k
R16 330k
C36 220p
C47 100n
R17 330k
C37 220p
C35 47n
R18 22k
(4V)
Max.1.5Vrms
Fb6 (220)
FB7 (220)
C39 100n
R20 (470)
C38 4u7
R19 4k7
L7,10,11,12, 15, 201 : EPCOS SBC
BFO
L201 22uH
R201 680k
22n
(22p NP0)
T1 C205
BC547c
C202
C203 220p
0.2Vdc / 50mVrms HF
(4p7) C207
Xt
(10.7 MHz)
C204 220p
R203 1k