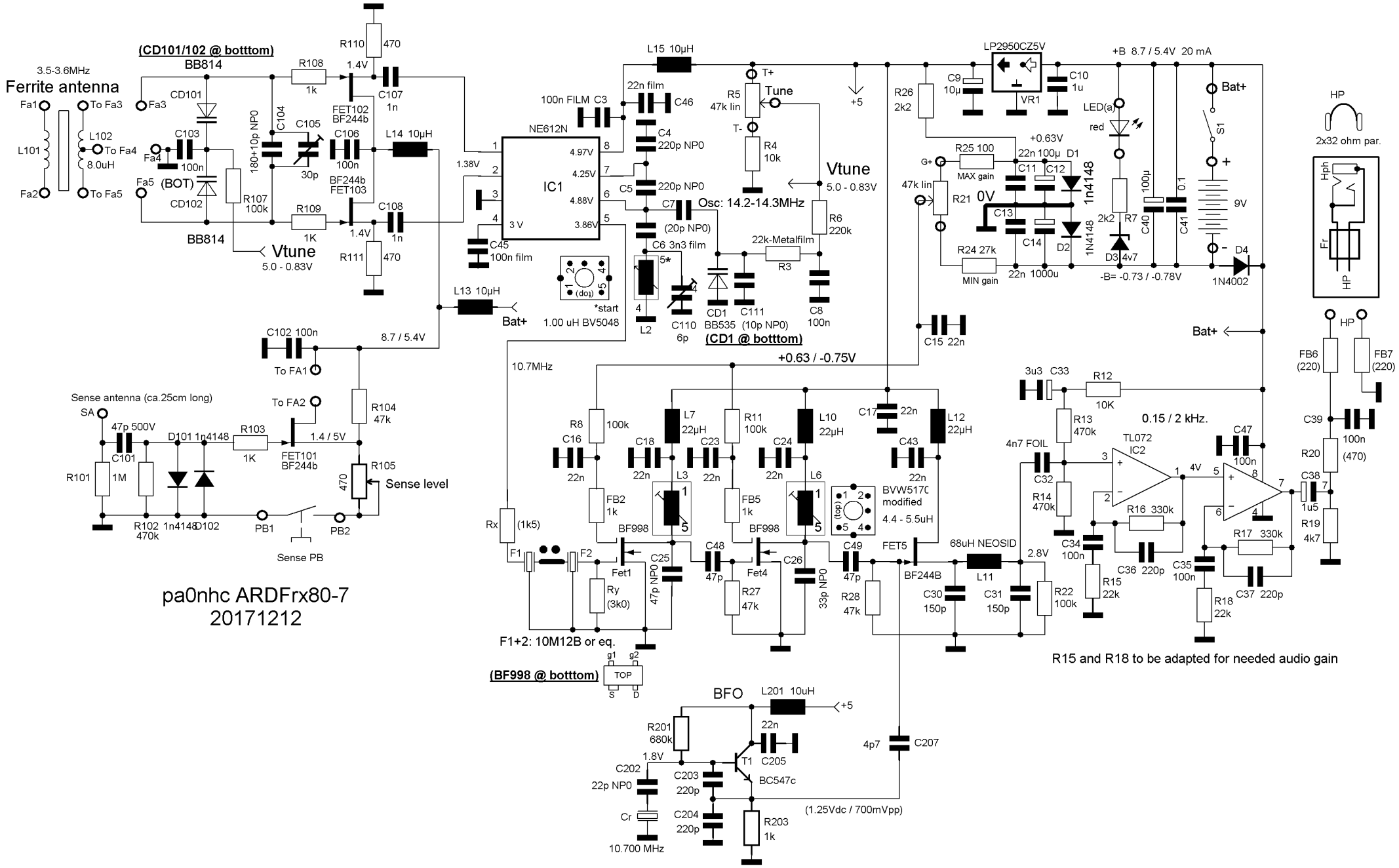
(CD101/102 @ botttom)
BB814
3.5-3.6MHz
Ferrite antenna
Fa1
To Fa3
L101
L102
To Fa4
8.0uH
Fa2
To Fa5
Fa3
CD101
C103
100n
Fa4
Fa5
(BOT)
CD102
R107
100k
180+10p NP0
C104
C105
30p
C106
100n
BF244b
FET103
R108
1k
R109
1K
R110
470
R111
470
FET102
BF244b
1.4V
C107
1n
C108
1n
L14 10µH
BB814
Vtune
5.0 - 0.83V
L13 10µH
Bat+
8.7 / 5.4V
C102 100n
To FA1
To FA2
R104
47k
Sense antenna (ca.25cm long)
SA
47p 500V
C101
D101 1n4148
R103
1K
FET101
BF244b
1.4 / 5V
R105
470
Sense level
R101
1M
R102
470k
1n4148
D102
PB1
PB2
Sense PB
pa0nhc ARDFrx80-7
20171212
L15 10µH
100n FILM C3
22n film
C46
C4
220p NP0
NE612N
IC1
1.38V
4.97V
4.25V
4.88V
3.86V
3 V
C45
100n film
C5
220p NP0
C7
(20p NP0)
Osc: 14.2-14.3MHz
C6 3n3 film
L2
C110
6p
CD1
BB535
C111
(10p NP0)
(CD1 @ botttom)
T+
R5
47k lin
Tune
T-
R4
10k
Vtune
5.0 - 0.83V
R6
220k
22k-Metalfilm
R3
C8
100n
*start
1.00 uH BV5048
10.7MHz
+0.63 / -0.75V
R8
100k
C16
22n
FB2
1k
L7
22µH
C18
22n
L3
C23
22n
R11
100k
FB5
1k
C24
22n
L10
22µH
L6
C17
22n
L12
22µH
C43
22n
BVW517C
modified
4.4 - 5.5uH
Rx
(1k5)
F1
F2
Ry
(3k0)
BF998
Fet1
C25
47p NP0
C48
47p
Fet4
C26
33p NP0
C49
47p
R27
47k
R28
47k
FET5
BF244B
68uH NEOSID
L11
C30
150p
C31
150p
2.8V
R22
100k
F1+2: 10M12B or eq.
(BF998 @ botttom)
TOP
BFO
L201 10uH
+5
R201
680k
22n
C205
1.8V
T1
BC547c
C202
22p NP0
C203
220p
C204
220p
Cr
10.700 MHz
R203
1k
4p7
C207
(1.25Vdc / 700mVpp)
LP2950CZ5V
VR1
C9
10µ
C10
1u
+B 8.7 / 5.4V 20 mA
Bat+
LED(a)
red
S1
9V
R26
2k2
R25 100
MAX gain
+0.63V
22n 100µ
C11
C12
D1
1n4148
G+
47k lin
R21
0V
C13
C14
D2
1N4148
R24 27k
MIN gain
22n 1000u
2k2
R7
D3 4v7
C40
100µ
C41
0.1
-B= -0.73 / -0.78V
D4
1N4002
C15 22n
Bat+
HP
2x32 ohm par.
Hph
Fr
HP
FB6
(220)
FB7
(220)
C39
100n
R20
(470)
C38
1u5
R19
4k7
3u3 C33
R12
10K
R13
470k
0.15 / 2 kHz.
4n7 FOIL
C32
R14
470k
TL072
IC2
4V
C47
100n
R16 330k
C34
100n
C36 220p
R15
22k
R17 330k
C35
100n
C37 220p
R18
22k
R15 and R18 to be adapted for needed audio gain